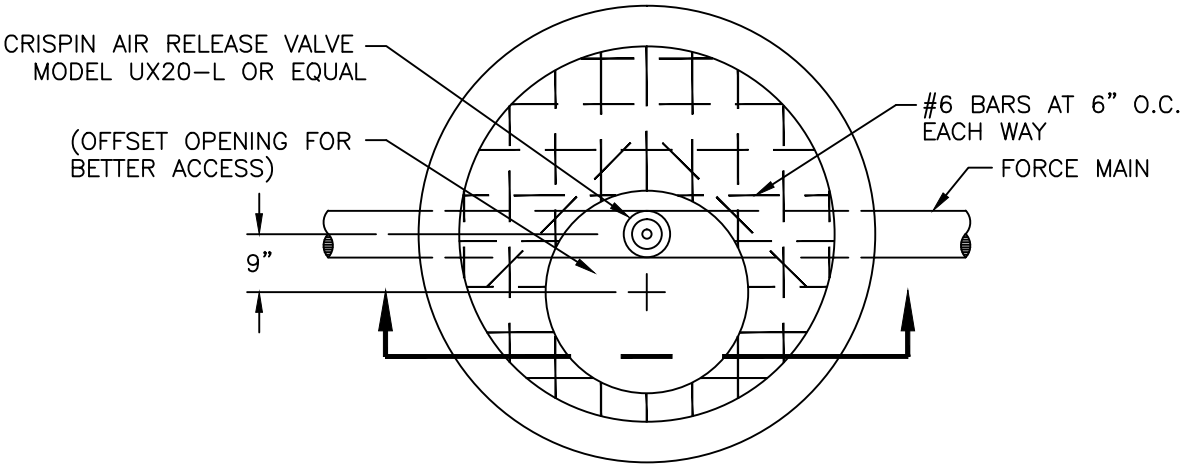


PLAN

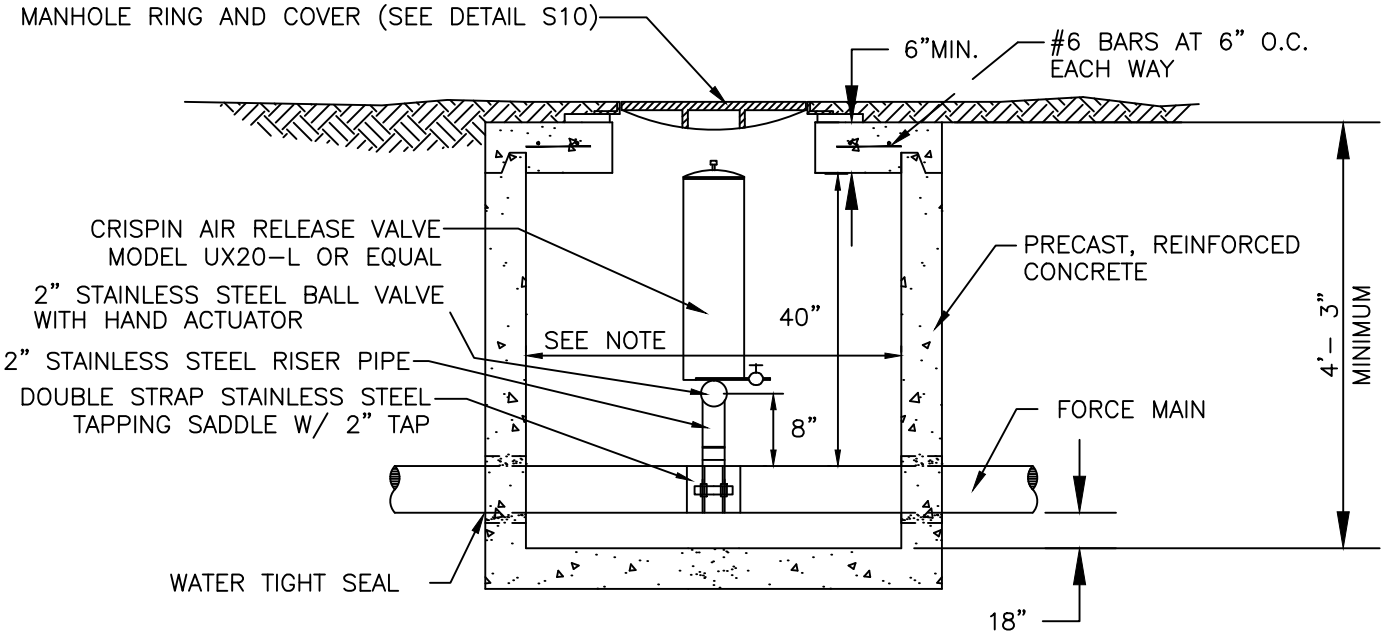


SECTION

NOTE:
≤ 8" FORCEMAIN PIPE, USE 4.0' DIA. MANHOLE
10" &12" FORCEMAIN PIPE, USE 6.0' DIA MANHOLE

# 2" AIR RELEASE VALVE AND MANHOLE

STANDARD CONSTRUCTION DETAILS

CITY OF Savannah
WATER RESOURCES AND PUBLIC WORKS BUREAU
*Planning & Engineering*

SCALE: N.T.S.
DATED: SEP 2013
PLATE NUMBER: S11