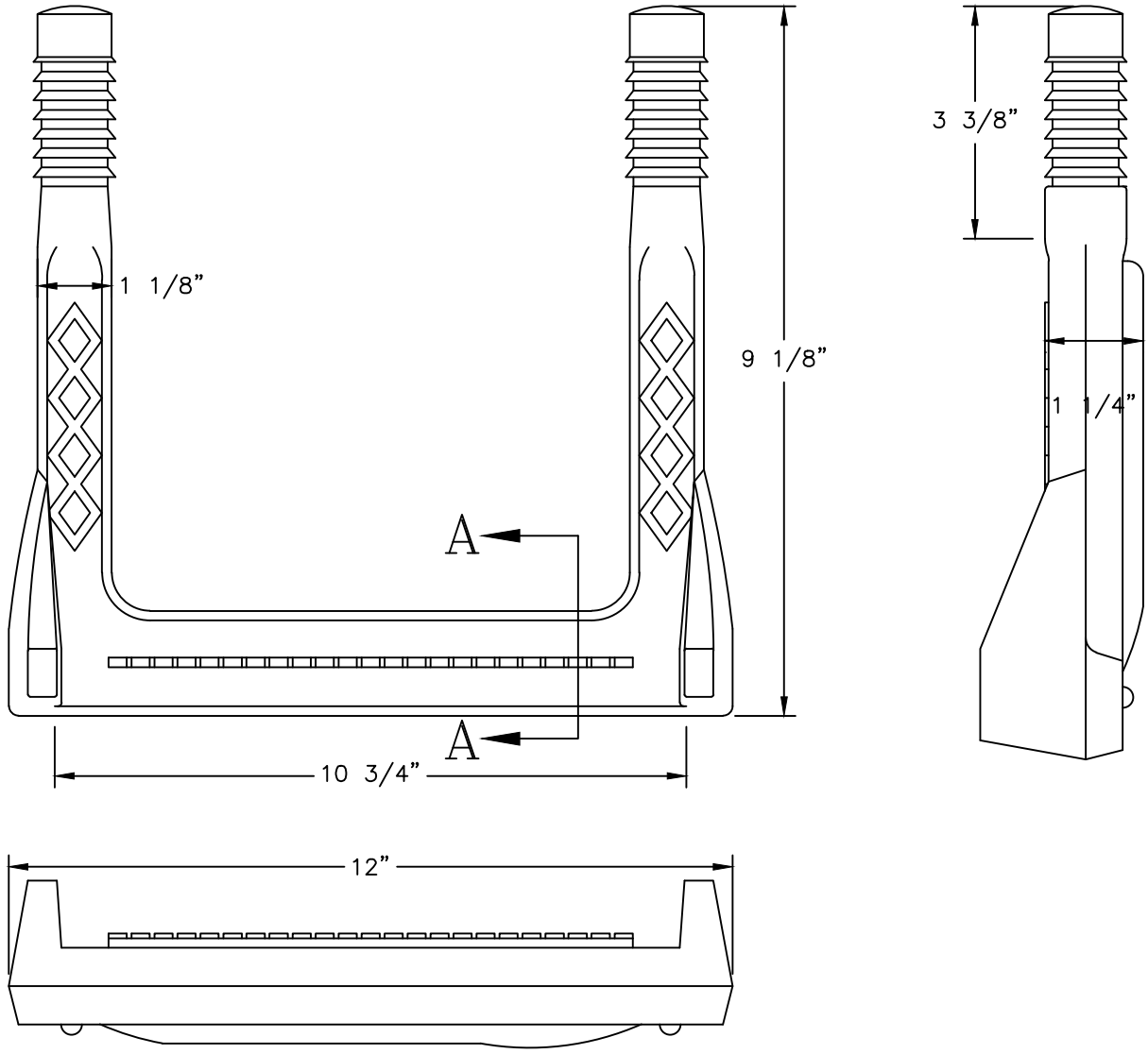

COPOLYMER POLYPROPYLENE PLASTIC

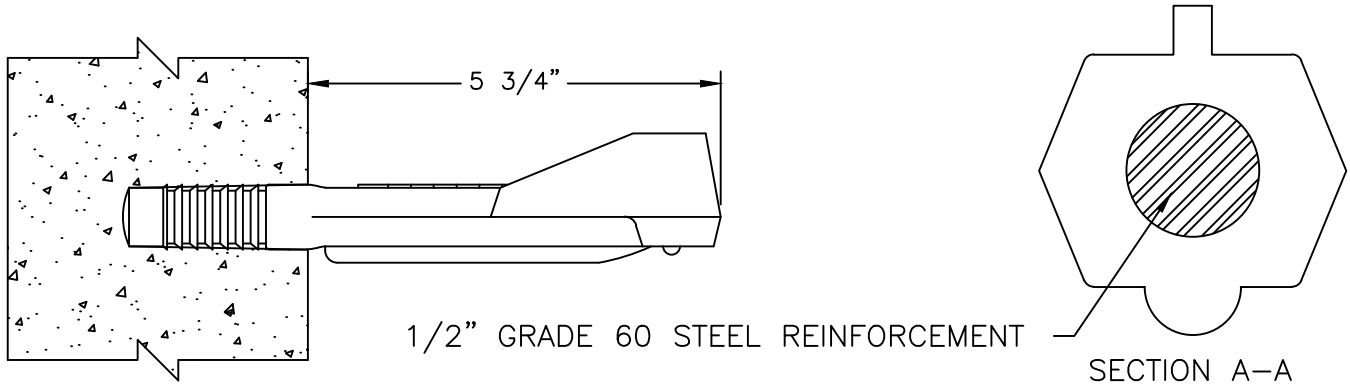

POLYPROPYLENE MANHOLE STEP

STANDARD CONSTRUCTION DETAILS

CITY OF Savannah
WATER RESOURCES AND PUBLIC WORKS BUREAU
Planning & Engineering

SCALE: N.T.S.
DATED: SEP 2013
PLATE NUMBER: S15