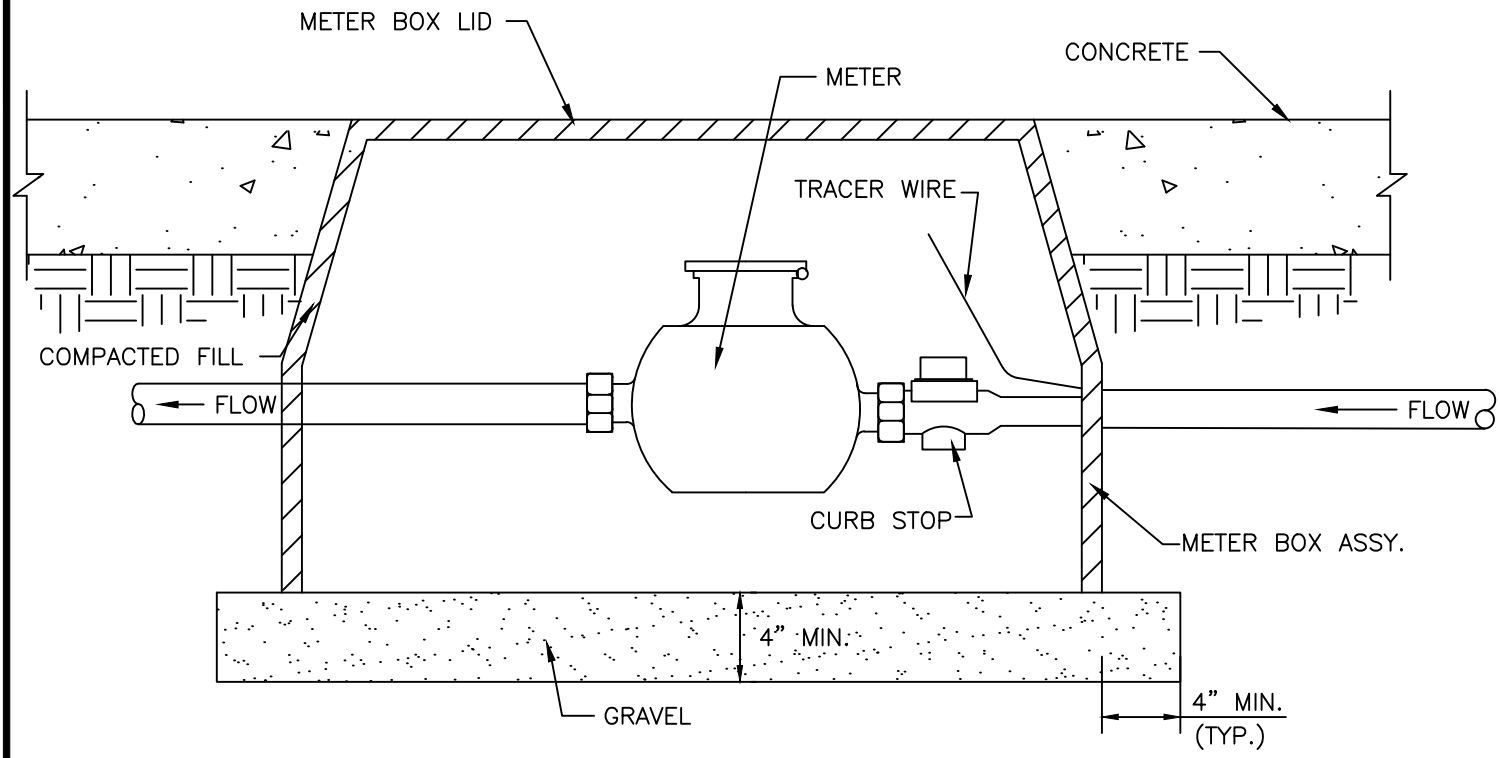

NOTES:

1. CONCRETE SHALL BE CAST FLUSH WITH TOP OF LID.
2. CAST IRON OR QUAZITE BOX ONLY.

RESIDENTIAL WATER METER W/O BACKFLOW PREVENTER WITHIN CONCRETE

STANDARD CONSTRUCTION DETAILS

CITY OF Savannah
WATER RESOURCES AND PUBLIC WORKS BUREAU
Planning & Engineering

SCALE: N.T.S.
DATED: SEP 2013
PLATE NUMBER: W9