NOTES:

1. MANHOLE FRAME AND COVER PER DETAIL W27
2. THE BOTTOM OF THE MANHOLE FRAME SHALL NOT BE MORE THAN 12" ABOVE THE TOP OF THE MANHOLE STRUCTURE.
3. PRECAST CONCENTRIC CONE RISERS MAY BE USED WHERE REQUIRED FOR DEPTH.
4. THE MANHOLE FRAME AND COVER MUST BE CENTERED OVER THE VALVE OPERATING NUTS.
5. POLYPROPYLENE MANHOLE STEPS SHALL BE PROVIDED AT 12" O.C. FOR MANHOLES GREATER THAN 4 FEET DEEP.

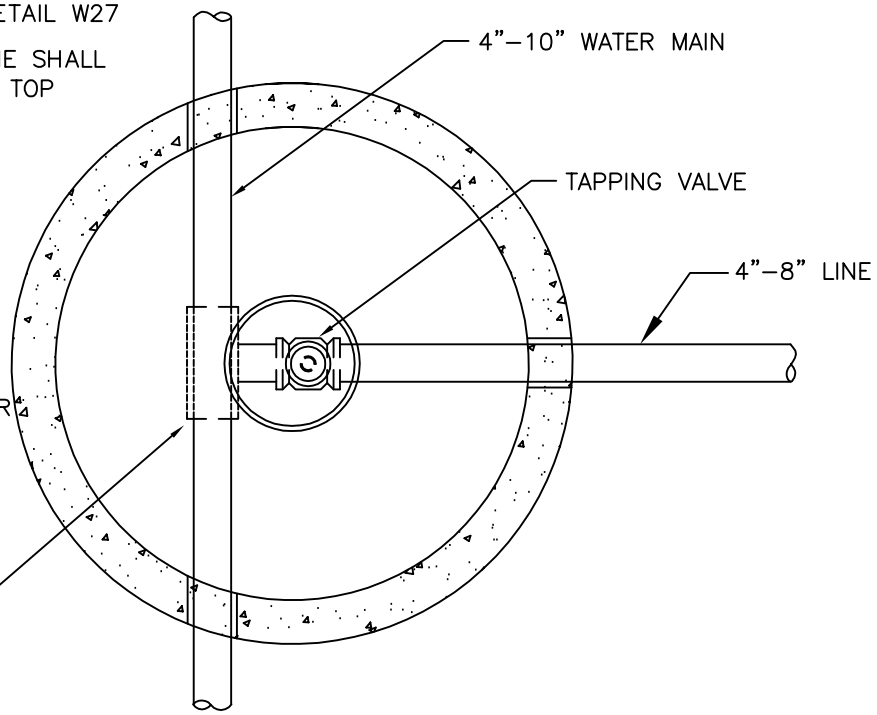

PLAN

NOTE: SEE DETAIL W24 FOR TAPPING SLEEVE AND VALVE DETAIL

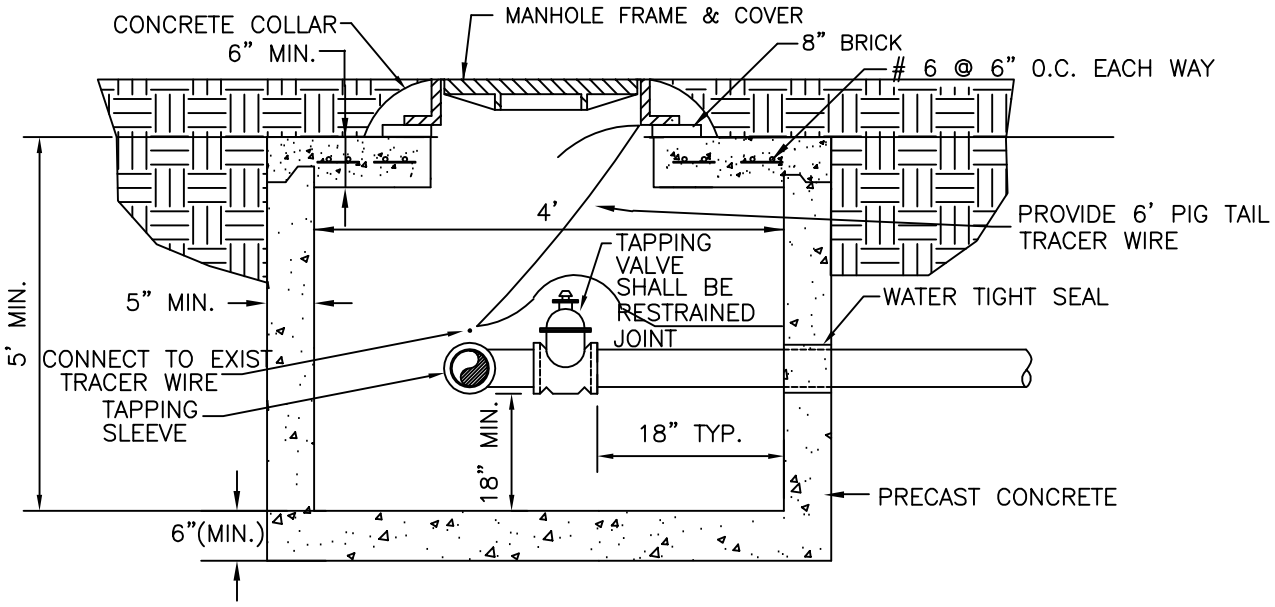

SECTION

VALVE MANHOLE FOR 4"–8" TAPPING SLEEVES & VALVES

STANDARD CONSTRUCTION DETAILS	CITY OF Savannah WATER RESOURCES AND PUBLIC WORKS BUREAU *Planning & Engineering*	SCALE: N.T.S. DATED: SEP 2013 PLATE NUMBER: W25C