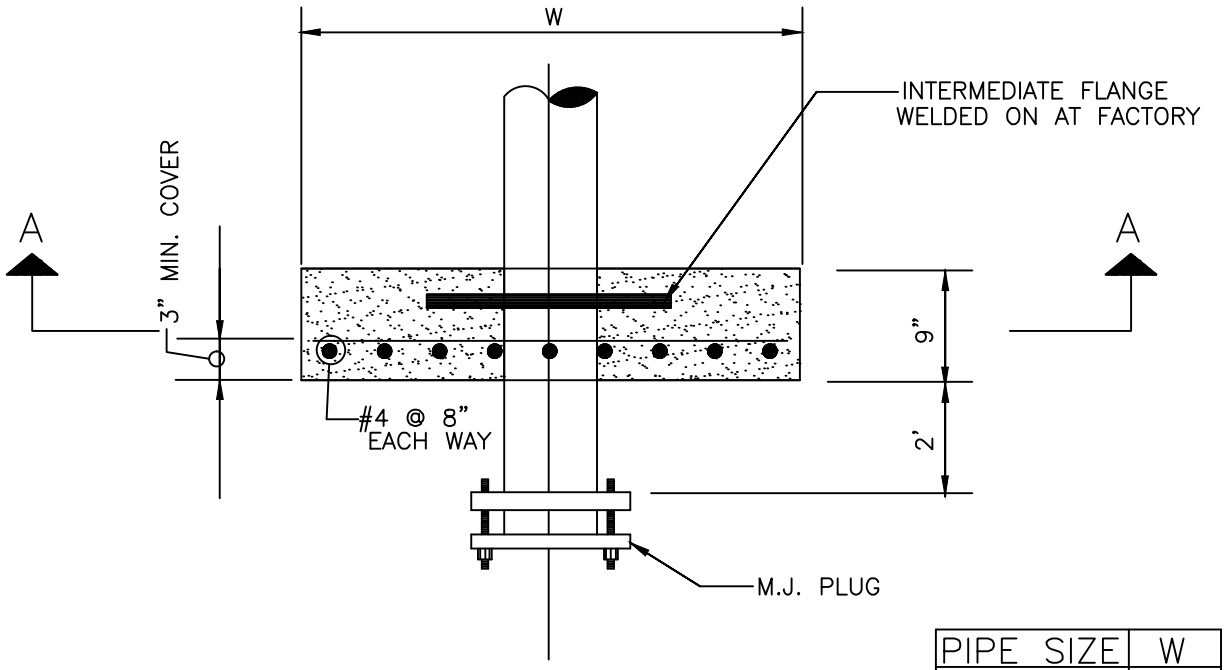

PLAN

PIPE SIZE	W
12"	5'
16"	6'
24"	7'

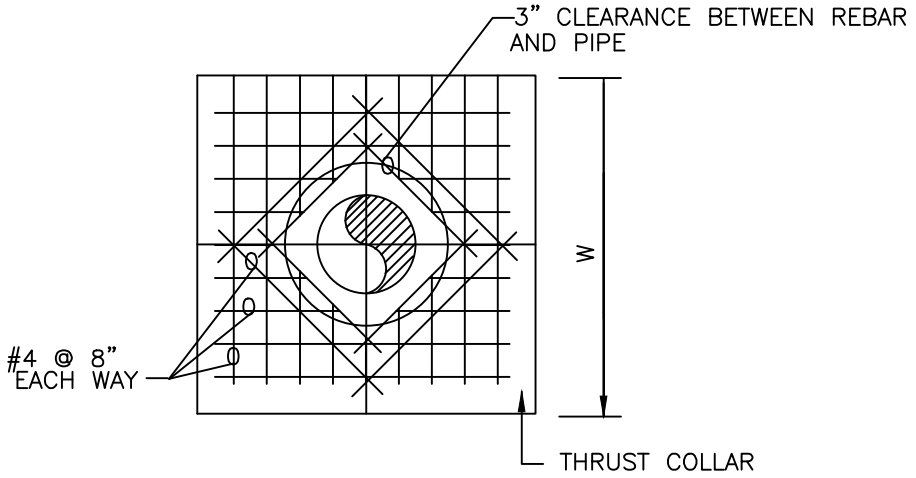

SECTION A–A

WATER LINE TERMINATION (12" TO 24")

STANDARD CONSTRUCTION DETAILS

CITY OF Savannah
WATER RESOURCES AND PUBLIC WORKS BUREAU
Planning & Engineering

SCALE: N.T.S.
DATED: SEP 2013
PLATE NUMBER: W35